DATE		PROJECT
LOCATION		
TYPE		

6531 U.S. 9, Howell Township, NJ, 07731, USA | 929.333.9777 | sales@zeevlighting.com

Version 1.2 | January 7, 2024

ODRAZ - CD11807/LED-44/AGB

DESCRIPTION

The Odraz Stunning 44" LED round chandelier with pearly infused white nebulas within each crafted crystal which echo inside the pendant with dramatic sequel from inner mirror and finished with our premium aged brass. Easily flush mountable and equipped with integrated replaceable LED, dimmable 3CCT 3000K, 3500K, 4000K swith. Available in 4 sizes (24", 32", 44", and 2-tier 44") and 3 finish options.

FINISHES

CD11807/LED-44/AGB

Aged Brass

CD11808/LED-44/PN

Polished Nickel

CD11809/LED-44/SBB

Satin Brushed Black

SPECIFICATION DATA

DETAILS

FINISH	Premium Aged Brass
CRYSTAL	Clear K9 with White Nebulas
LAMPING	Integrated LED Replaceable
WATTAGE	45W
INITIAL LUMENS	4,500 lm
KELVIN	3CCT - 3000K | 3500K | 4000K
CRI	90
VOLTAGE	120V
DIMMABLE	100% - 10%, ELV/Triac (not included)
LED RATED LIFE	50,000 hrs
SUSPENSION	Metal Stems
STEM DETAILS	45" Max 3x12" | 1x6" | 1x3"
WIRE DETAILS	144", Clear SVT Cable
WEIGHT	68 lbs
LOCATION	Indoor, Dry Location
SLOPE CEILING	Yes Included
FEATURE	Flush Mountable
WARRANTY	5 Year LED, 1 Year Fixture
MATERIALS	Steel, Crystal

MEASUREMENTS

OVERALL	D-43.75" x OAH-55.375"
CRYSTALS	L-3.75" x W-1" x H-5.375" ea
CANOPY	D-9 x H-1.25"
MAXIMUM HANG	55.375"
MINIMUM HANG	7"
CHANDELIER ONLY	D-43.75" x H-7.875"

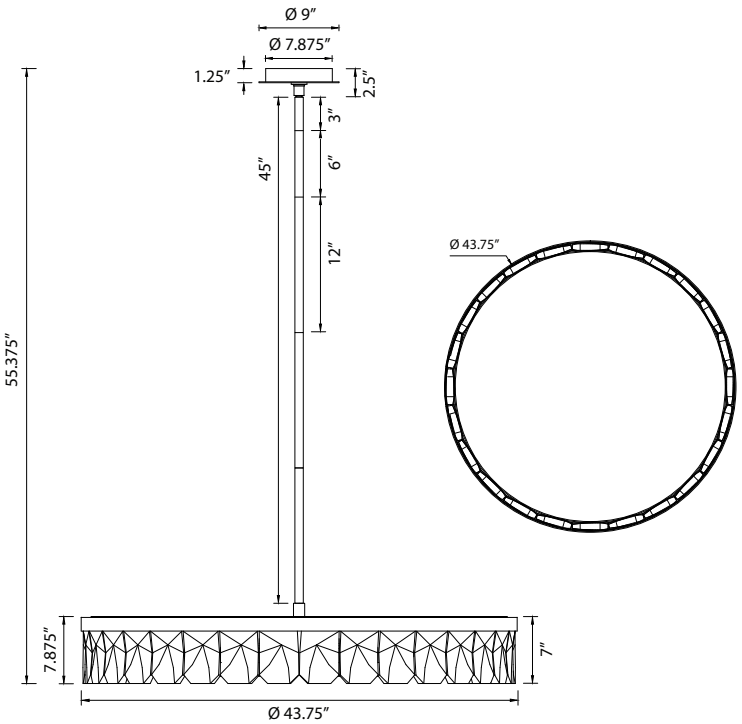

COMMENTS & NOTES